Invalidity of Claim 22 of U.S. Pat. No. 9,069,648 based on U.S. Pat. No. 5,457,284 to Ferguson ("Ferguson")

U.S. Pat. No. 9,069,648 – Claim 22	Prior Art - Ferguson
A method for delivering messages in a personal electronic device (PED), comprising:	Ferguson discloses a method for delivering messages in a personal electronic device. Title: "Interactive Dive Computer" Abstract: "An interactive apparatus for use by a scuba diver to provide for diver control of a specified dive-related parameter. The diver enters into the apparatus a desired parameter value, such as air reserve available at the completion of a dive, and the apparatus, based on the desired parameter and current dive conditions, determines the length of time the diver may remain at the current depth and still safely ascend to the surface. In the preferred embodiment, the apparatus also includes audible and visible alarms to alert the diver to the expiration of the determined length of safe dive time." 1:5-12: "This invention relates to computer systems for monitoring and interpreting the status of various underwater diving-related parameters, such as the status of compressed air supplies for scuba (self contained underwater breathing apparatus) divers, and in particular, relates to systems capable of receiving diver input for selected parameters, and determining specified dive characteristics in view of the diver-specific input values." 1:46-49: "It is a main object of the invention to provide a dive computer designed to guide a diver to the surface with a diver-specified air reserve remaining in a compressed air supply at the completion of the dive." Figure 3:

	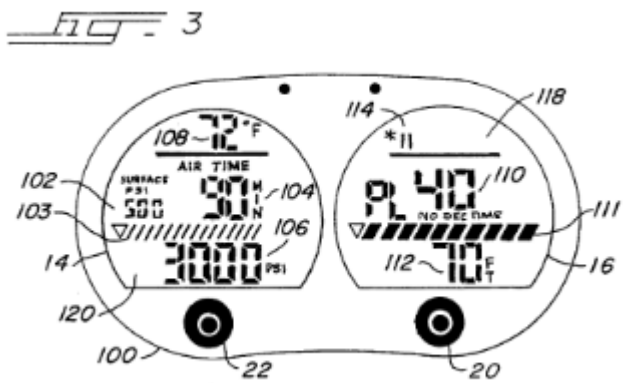
performing, with the PED, a first electronic based intelligence function; and	Ferguson discloses performing, with a personal device, a first electronic based intelligence function 1:62-67: "The above-identified objects are met or exceeded by an interactive dive computer for use by a scuba diver to assist the diver during the dive and to guide the diver to the surface using diver-specified parameters, including air reserve remaining in a compressed air supply at the completion of a dive."
performing, with the PED, a second electronic based intelligence function, comprising:	Ferguson discloses performing, a second electronic based intelligence function 1:67-2:3: "The present computer receives diver input of specific parameters and receives output of sensors monitoring pressure in the air supply, depth of the dive, and air consumption rates."
receiving conditions associated with one or more messages, the conditions including a selection condition and an output condition;	Ferguson discloses receiving conditions associated with one or more messages, the conditions including a selection condition and an output condition. Claim 1: "input means for setting at least one diver or dive-specific, dive-related parameter;"

	1:67-2:6 "The present computer receives diver input of specific parameters and receives output of sensors monitoring pressure in the air supply, depth of the dive, and air consumption rates. Furthermore, the present dive computer determines dive conditions from these inputs and outputs and conveys this information to the diver with various display components." 2:7-13: "More specifically, the present interactive dive computer provides for diver control of selected dive-related parameters and includes an input mechanism for setting at least one diver or dive-specific, dive-related parameter, a depth sensor for monitoring a depth below a surface of a body of water and an air sensor for monitoring an amount of air available in the compressed air supply." 2:18-20: "The output device determines dive conditions based on the outputs which are reflective of the specific input settings selected by the diver." 2:29-35: "Upon receipt of the required input data, the processing unit determines a safe diving period as the length of time the diver may remain at the current depth and still safely ascend to the surface with the specified air reserve remaining in the compressed air supply. Typically, electrical switches provide the input mechanism for specifying the air reserve." 3:45-53: "In the present dive computer 10, right and left switches, respectively designated 20 and 22, enable a diver to select a desired diver-specified, dive-related parameter. These parameters include, but are not limited to, the air reserve portion of a compressed air supply to be available at the completion of a dive, diver age, gender, height/weight ratio a dive log of previous dives, and/or navigational readings. If desired, additional switches 20, 22 may be employed for the inputting of various parameters as needed." 4:31-32: "The diver starts the process by manually activating the present dive computer 10, designated at 40." 5:4-11: "If the present dive computer 10 is not underwater, shown at 50, in log mode 49, or in minimum surface interval mode 80, the computer 10 proceeds to access a range of

	available air reserve values at block 54 and display the range to the diver at block 56. A range of 300 PSI to 950 PSI, with 50 PSI increments, is contemplated for the computer 10. The diver then selects the desired value at 58, and the computer 10 accepts the selected air reserve value at 60." 6:16-29: "The diver may now specify the selected dive parameter, e.g. air reserve value, by depressing the left side switch 22 for three seconds. The left side display 14 shows an air reserve value of 500 PSI in the surface PSI field 102. The diver may increase the value by 50 PSI by depressing the right switch 20. Depressing the left switch 22 decreases the value by 50 PSI. Depending on the parameter selected, other incremental parameter-specific values may be substituted for PSI, including, but not limited to, diver's age in years, and height/weight ratio. When the desired air reserve value has been selected, the diver releases the switches 20, 22, and the surface PSI field 102 goes blank within one minute."
sensing a signal in a local environment associated with the PED;	Ferguson discloses sensing a signal in a local environment associated with the PED Claim 1: "depth sensor means for monitoring a depth below a surface of a body of water;" Claim 1: "air sensor means for monitoring an amount of air available in the compressed air supply;" 3:66-4:2: "The present dive computer 10 further includes a high tank pressure transducer 24 to monitor the compressed air supply, a low pressure transducer 26 to monitor depth, a battery check circuit 32 and a temperature circuit 34." 5:17-20: "The computer 10 adjusts to changes in the dive profile as the changes occur, with the safe diving period increasing as the diver ascends to shallower depths and decreasing as the diver descends to deeper depths."
converting the signal to sensed data;	Ferguson discloses converting the signal to sensed data

	Claim 1: "computer means for receiving outputs from said input means, said depth sensor means, said air sensor means, and for monitoring air consumption over time based upon said output from said air sensor means, determining a breathing rate for the diver based on said air consumption over time, and for determining selected dive conditions based on said outputs, and which are reflective of the specific input settings selected by the diver;" 3:24-29: "Referring now to FIG. 1, the present dive computer, generally designated 10, includes two microprocessors, respectively designated 11 and 12, for processing information generated by the various input devices, and for driving displays to communicate to the user the results of that processing." 4:2-6: "These sensor elements 24, 26, 32, and 34 are connected to an analog-to-digital converter 28. The converter 28 accepts the analog signals, translates them into digital signals, and outputs the signals to the right side microprocessor 11."
detecting an event, at least in part, by comparing the sensed data with reference data that corresponds to the event	Ferguson discloses detecting an event, at least in part, by comparing the sensed data with reference data that corresponds to the event Claim 1: "computer means for receiving outputs from said input means, said depth sensor means, said air sensor means, and for monitoring air consumption over time based upon said output from said air sensor means, determining a breathing rate for the diver based on said air consumption over time, and for determining selected dive conditions based on said outputs, and which are reflective of the specific input settings selected by the diver;" 5:12-16: "Once the air reserve value is set, the present dive computer 10 enters a calculate dive profile mode 62. The computer 10 calculates a safe diving period based on the air reserve value, current dive conditions and anticipated future needs."
selecting a message from among the one or more messages based on the at least one selection condition and the event; and	Ferguson discloses selecting a message from among the one or more messages based on the at least one selection condition and the event

	Claim 1: "display means for displaying said selected dive conditions determined by said computer means, wherein activation of said computer means is prevented when said depth sensor means monitors a predetermined depth below said surface"
initiating output of the message from the PED in response to the event meeting the output condition.	Ferguson discloses initiating output of the message from the PED in response to the event meeting the output condition Claim 1: "display means for displaying said selected dive conditions determined by said computer means, wherein activation of said computer means is prevented when said depth sensor means monitors a predetermined depth below said surface" 2:63-3:3: "Information generated by the present dive computer can be communicated to the diver both visually and audibly. Preferably, the dive computer includes a display to confirm the specified parameter and to convey to the diver the time remaining in the safe diving period. Furthermore, an alarm is included on the present computer to help ensure that the diver begins his or her ascent at the proper time. The alarm may be audible or visible, or both." 5:50-55: "When the present dive computer 10 determines that the safe diving period has expired, it checks whether the flag has been reset 72. If the flag is in a reset state, the computer 10 activates an audible alarm 66, displays a visual alarm 68, and sets the flag 70." Figures 2A-2B:

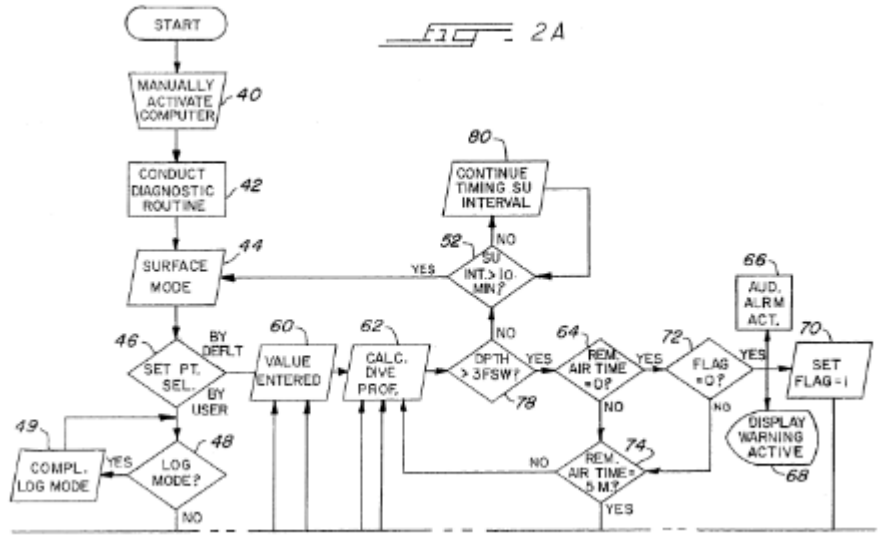
START
MANUALLY ACTIVATE COMPUTER
40
CONDUCT DIAGNOSTIC ROUTINE
42
SURFACE MODE
44
SET PT. SEL.
46
BY DEFLT
BY USER
LOG MODE?
48
YES
NO
COMPL. LOG MODE
49
VALUE ENTERED
60
CALC. DIVE PROF.
62
DPTH > 3FSW?
78
YES
NO
SU INT.> 10 MIN?
52
YES
NO
CONTINUE TIMING SU INTERVAL
80
REM. AIR TIME =0?
64
YES
NO
REM. AIR TIME = 5 M?
74
YES
NO
FLAG =0?
72
YES
NO
SET FLAG=1
70
AUD. ALRM ACT.
66
DISPLAY WARNING ACTIVE
68

FIG. 2A

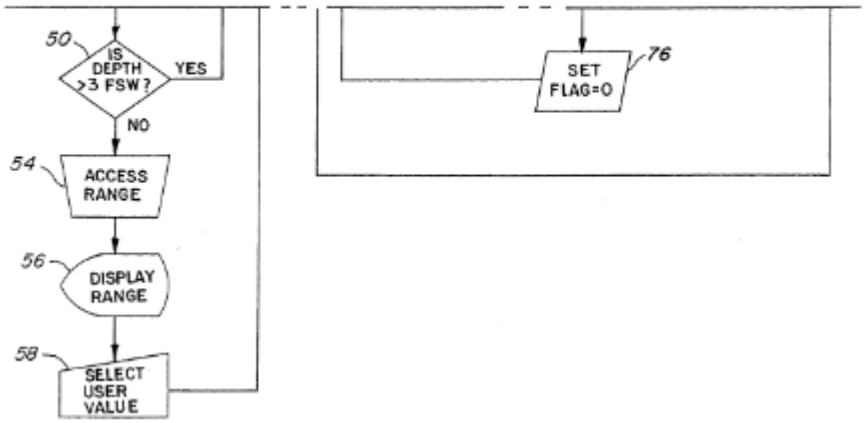
IS DEPTH >3 FSW?
50
YES
NO
ACCESS RANGE
54
DISPLAY RANGE
56
SELECT USER VALUE
58
SET FLAG=0
76

FIG. 2B

US005457284A

United States Patent [19]

Ferguson

[11] **Patent Number: 5,457,284**

[45] **Date of Patent: Oct. 10, 1995**

[54] **INTERACTIVE DIVE COMPUTER**

[75] Inventor: **Arthur R. Ferguson**, Northbrook, Ill.

[73] Assignee: **Dacor Corporation**, Northfield, Ill.

[21] Appl. No.: **66,510**

[22] Filed: **May 24, 1993**

[51] **Int. Cl.**[6] **G06F 159/00**

[52] **U.S. Cl.** **128/201.27**; 364/558

[58] **Field of Search** 364/413.31, 558; 128/905, 201.27; 405/185, 186

[56] **References Cited**

U.S. PATENT DOCUMENTS

4,109,140 8/1978 Etra .
4,192,001 3/1980 Villa .
4,563,758 1/1986 Paternostro .
4,586,136 4/1986 Lewis .
4,604,737 8/1986 Hoffman 417/52
4,658,358 4/1987 Leach et al. .
4,782,338 11/1988 Barshinger .
4,876,903 10/1989 Budinger .
4,882,678 11/1989 Hollis et al. .
5,033,818 7/1991 Barr 359/630
5,049,864 9/1991 Barshinger .
5,301,668 4/1994 Hales 128/205.23
5,351,188 9/1994 Sato 364/413.31

Primary Examiner—Donald E. McElheny, Jr.
Attorney, Agent, or Firm—Greer, Burns & Crain, Ltd.

[57] **ABSTRACT**

An interactive apparatus for use by a scuba diver to provide for diver control of a specified dive-related parameter. The diver enters into the apparatus a desired parameter value, such as air reserve available at the completion of a dive, and the apparatus, based on the desired parameter and current dive conditions, determines the length of time the diver may remain at the current depth and still safely ascend to the surface. In the preferred embodiment, the apparatus also includes audible and visible alarms to alert the diver to the expiration of the determined length of safe dive time.

22 Claims, 5 Drawing Sheets

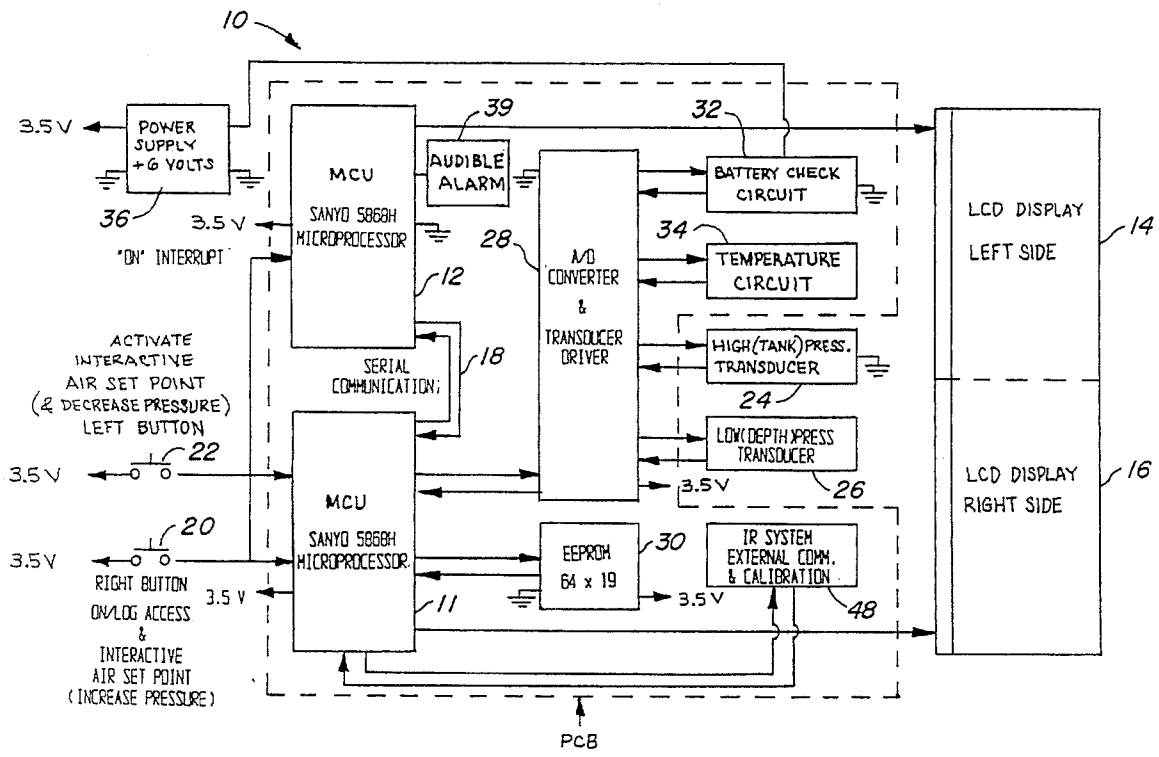

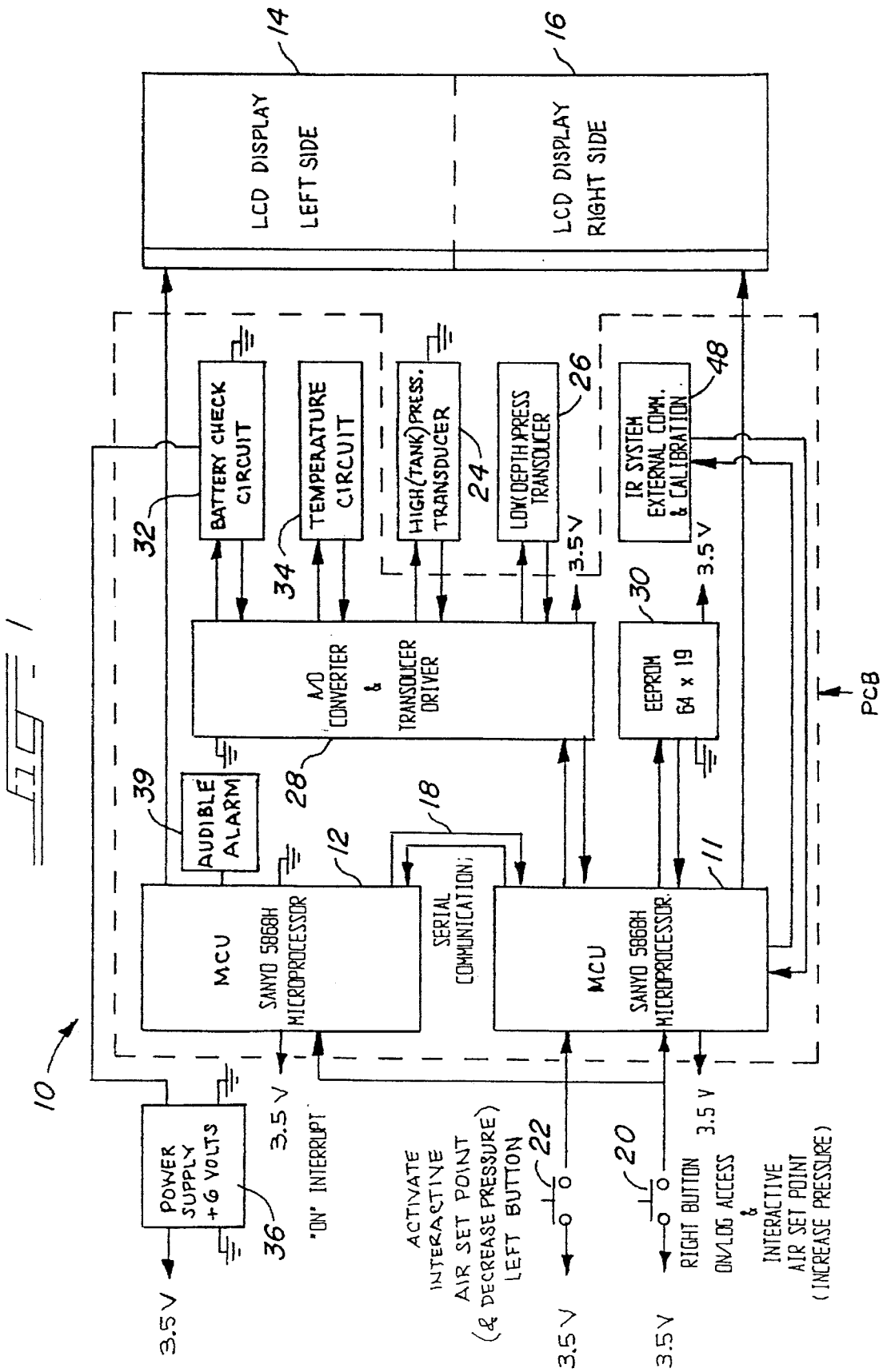
LCD DISPLAY LEFT SIDE
LCD DISPLAY RIGHT SIDE
BATTERY CHECK CIRCUIT
TEMPERATURE CIRCUIT
HIGH (TANK) PRESS. TRANSDUCER
LOW (DEPTH) PRESS TRANSDUCER
IR SYSTEM EXTERNAL COMM. & CALIBRATION
A/D CONVERTER & TRANSDUCER DRIVER
EEPROM 64 x 19
AUDIBLE ALARM
MCU SANYO 5868H MICROPROCESSOR
SERIAL COMMUNICATION
MCU SANYO 5868H MICROPROCESSOR
POWER SUPPLY +6 VOLTS
3.5 V
"ON" INTERRUPT
ACTIVATE INTERACTIVE AIR SET POINT (& DECREASE PRESSURE) LEFT BUTTON
RIGHT BUTTON
ON/LOG ACCESS & INTERACTIVE AIR SET POINT (INCREASE PRESSURE)
PCB
10
11
12
14
16
18
20
22
24
26
28
30
32
34
36
39
48

FIG. 1

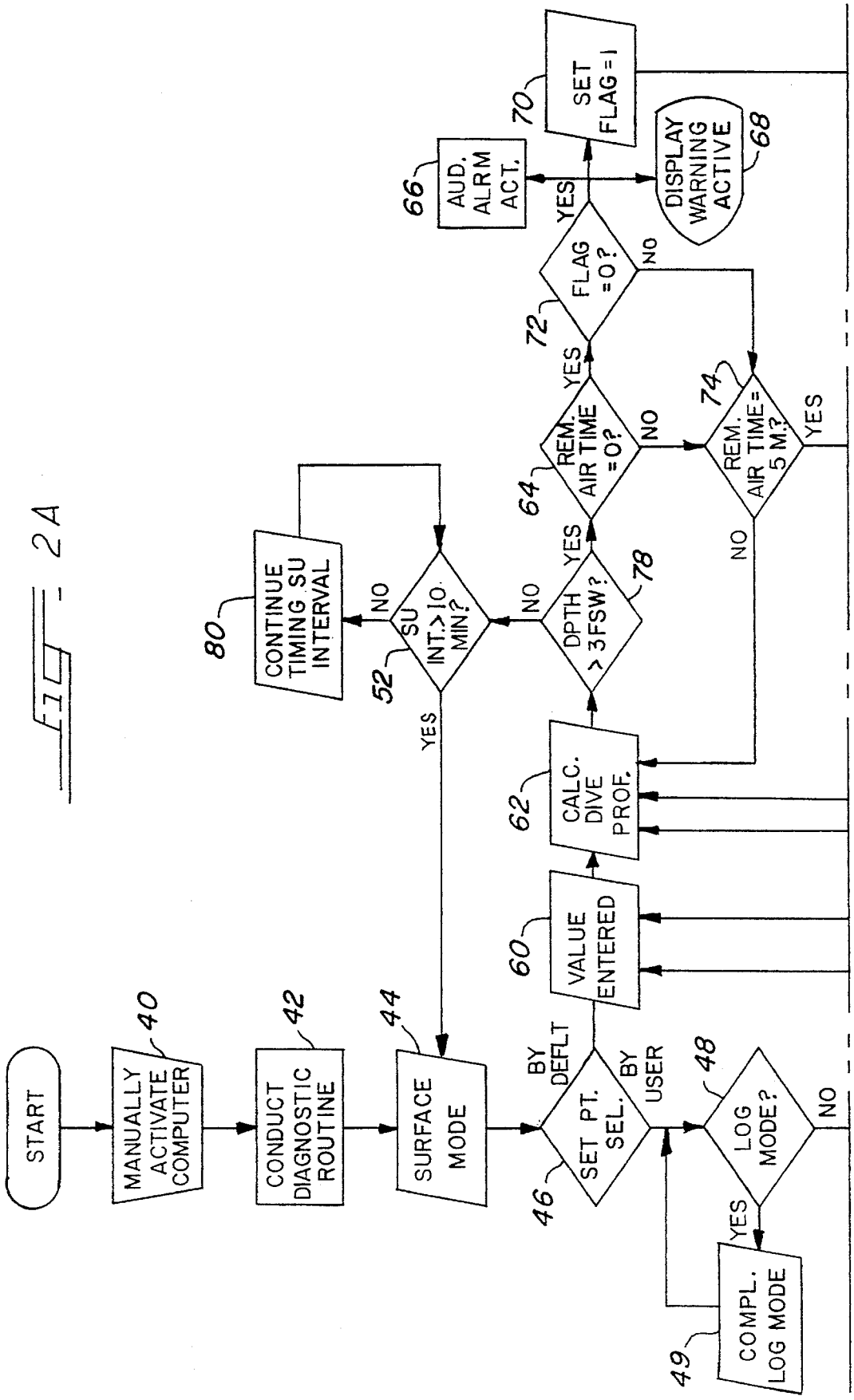
START
MANUALLY ACTIVATE COMPUTER
40
CONDUCT DIAGNOSTIC ROUTINE
42
SURFACE MODE
44
SET PT. SEL.
46
BY DEFLT
BY USER
LOG MODE?
48
YES
NO
COMPL. LOG MODE
49
VALUE ENTERED
60
CALC. DIVE PROF.
62
DPTH > 3FSW?
78
YES
NO
REM. AIR TIME =0?
64
YES
NO
REM. AIR TIME= 5 M.?
74
YES
NO
FLAG =0?
72
YES
NO
AUD. ALRM ACT.
66
SET FLAG=1
70
DISPLAY WARNING ACTIVE
68
SU INT.>10 MIN?
52
YES
NO
CONTINUE TIMING SU INTERVAL
80

FIG. 2A

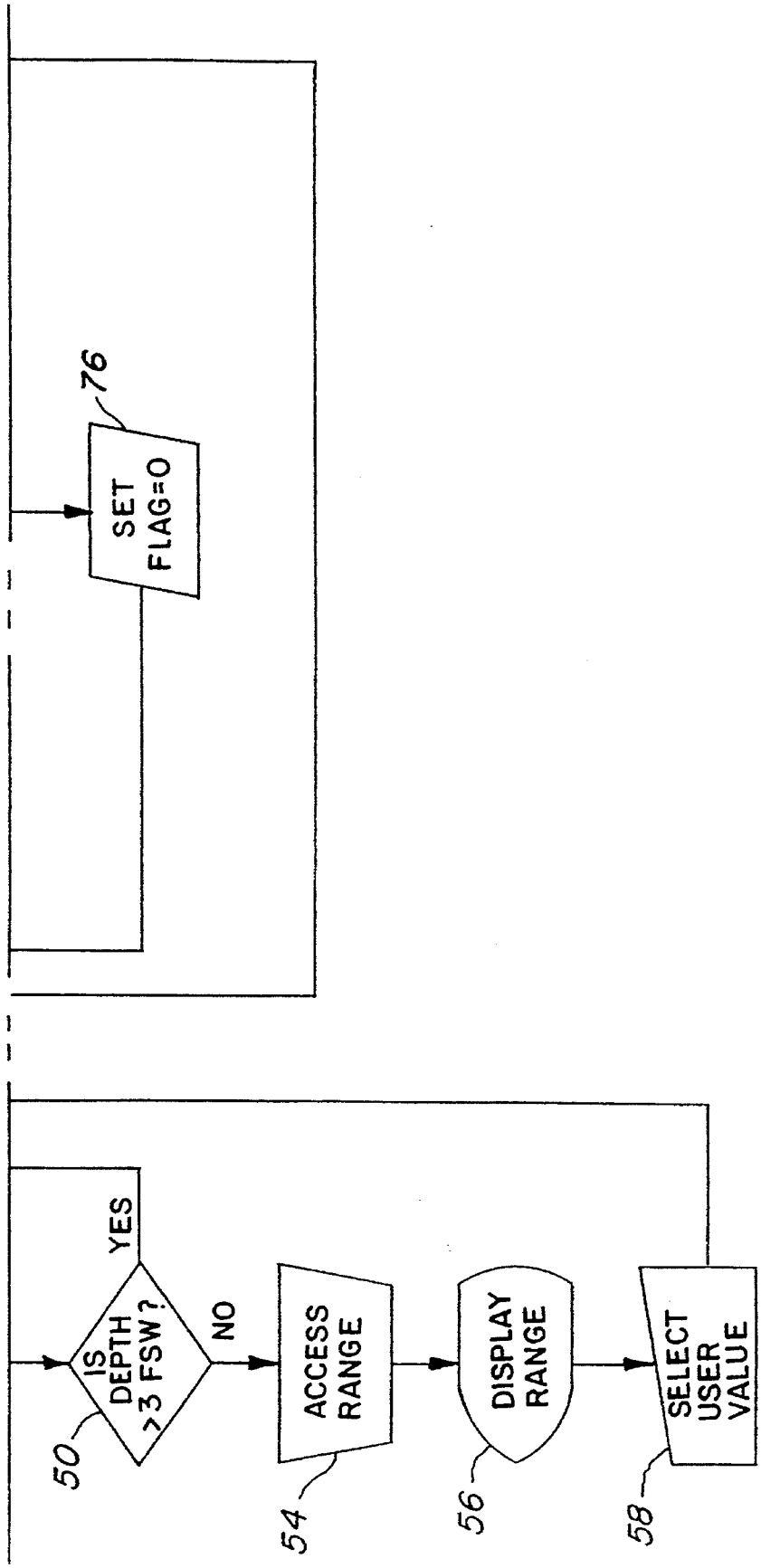
IS DEPTH >3 FSW?
YES
NO
50
ACCESS RANGE
54
DISPLAY RANGE
56
SELECT USER VALUE
58
SET FLAG=0
76

FIG - 2B

FIG. 3

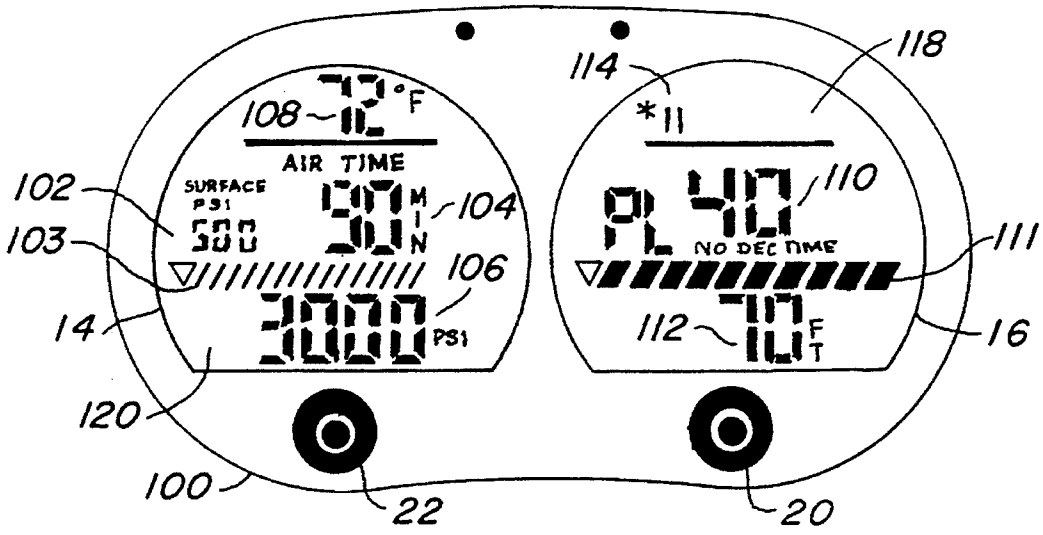
108
°F
AIR TIME
SURFACE PSI
500
MIN
104
106
3000
PSI
102
103
14
120
100
22
114
*11
118
110
PL 40
NO DEC TIME
111
112
FT
16
20

FIG. 4

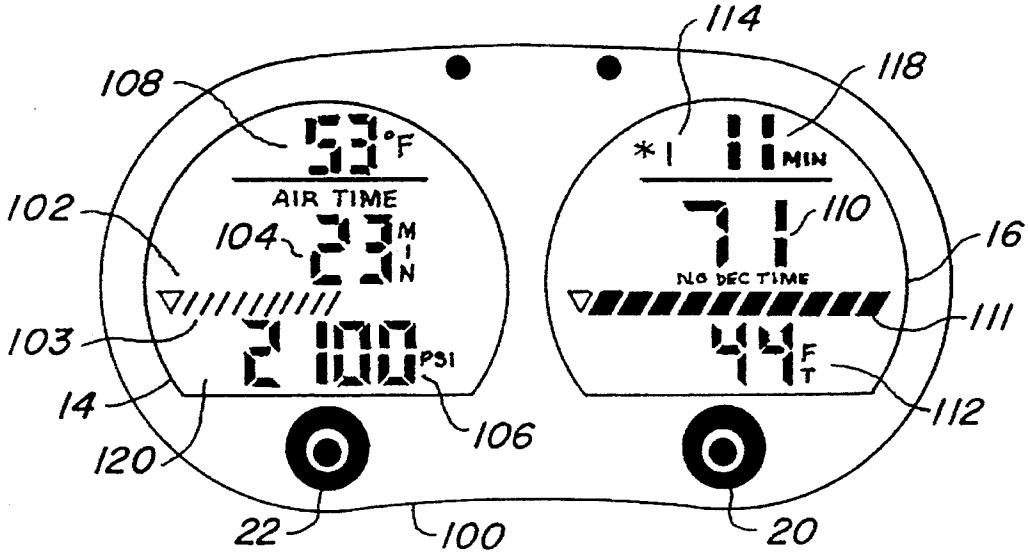
108
53
°F
AIR TIME
104
23
MIN
2100
PSI
102
103
14
120
106
22
100
114
*1
11
MIN
118
110
71
NO DEC TIME
16
111
44
FT
112
20

FIG. 5

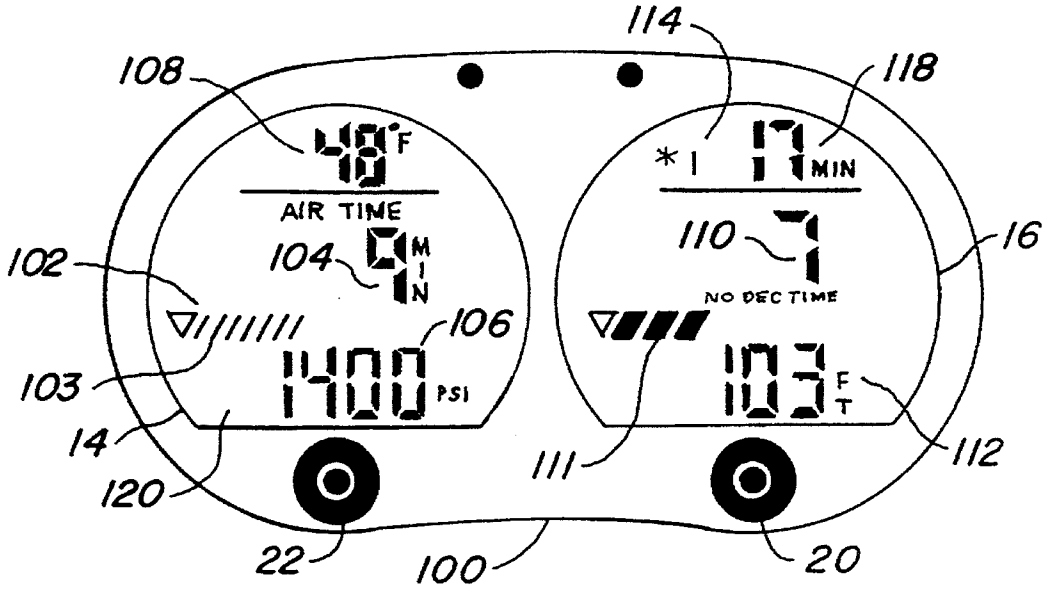
114
108
118
48°F
*1
17 MIN
AIR TIME
110
7
102
104
9 MIN
16
NO DEC TIME
106
1400 PSI
103
103 FT
14
111
112
120
22
100
20

FIG. 6

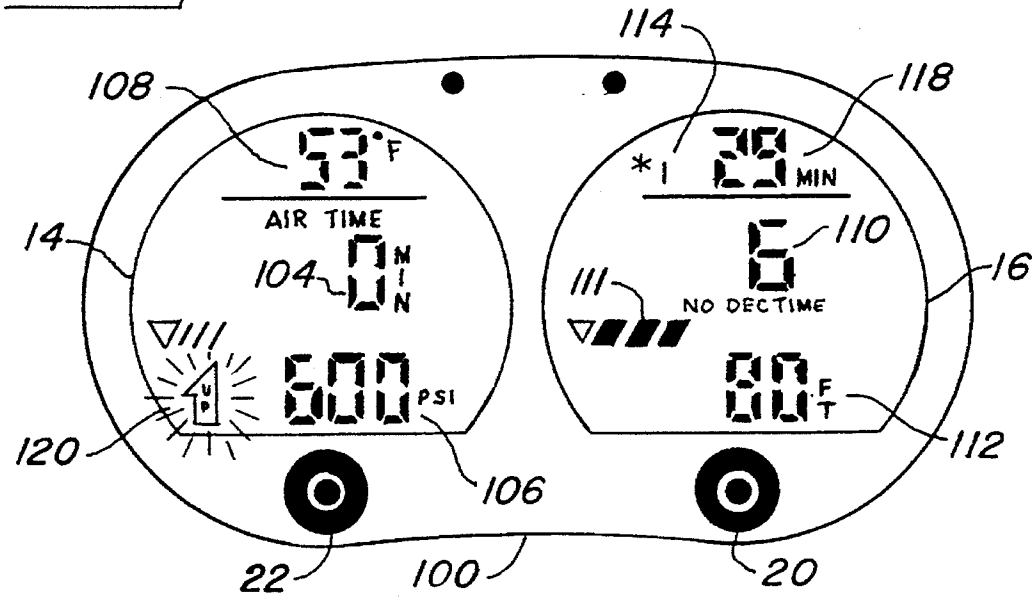
114
108
118
53°F
*1
28 MIN
AIR TIME
14
110
104
0 MIN
111
16
NO DEC TIME
UP
600 PSI
80 FT
120
112
106
22
100
20

INTERACTIVE DIVE COMPUTER

BACKGROUND OF THE INVENTION

This invention relates to computer systems for monitoring and interpreting the status of various underwater diving-related parameters, such as the status of compressed air supplies for scuba (self contained underwater breathing apparatus) divers, and in particular, relates to systems capable of receiving diver input for selected parameters, and determining specified dive characteristics in view of the diver-specific input values.

A recurring concern of users of scuba gear is how long a given air supply will last. To ensure an adequate air supply, the diver may cut his or her dive short, returning to the surface with a large excess of breathable air. Erring too far on the side of caution, however, wastes time and resources, and restricts diving flexibility. To help solve this problem, dive computers were created to assist divers maximizing the length of their dive time without incurring substantial additional risk.

Conventional dive computers calculate a diver's air consumption, measure the remaining air supply, and then determine the time a diver may safely remain at his current depth. These computers display the time remaining based on the diver reaching the surface either just prior to the complete exhaustion of his air supply or with some fixed safety margin (300 PSI, for example).

Fixed safety margins, however, are unresponsive to various diver needs. For example, the diver may require an extra air reserve in order to facilitate a long swim to shore or to a boat. Also, the diver may want an extra supply of air in case of an emergency. Furthermore, a diver may simply prefer safety margins different from those prescribed by the dive equipment manufacturers. In addition, there are other dive-related parameters which influence air consumption, or general diver performance, including the age, gender, physical condition of the diver, as well as the number, depth and duration of dives previously made by the diver.

There is a need, therefore, for an instrument that determines a safe diving or air reserve period based on both current dive conditions and the diver's personal safety margin preferences, as well as the diver's particular physical profile.

It is a main object of the invention to provide a dive computer designed to guide a diver to the surface with a diver-specified air reserve remaining in a compressed air supply at the completion of the dive.

Another object of the invention is to provide a dive computer which receives a variety of diver inputs to both more accurately monitor diver performance, and to provide additional information to the diver regarding dive-related conditions.

Yet another object of the invention is to enhance the accuracy of such a dive computer by basing dive projections on the history of previous dives and by repetitively recalculating the safe diving period during a current dive.

SUMMARY OF THE INVENTION

The above-identified objects are met or exceeded by an interactive dive computer for use by a scuba diver to assist the diver during the dive and to guide the diver to the surface using diver-specified parameters, including air reserve remaining in a compressed air supply at the completion of a dive. The present computer receives diver input of specific

parameters and receives output of sensors monitoring pressure in the air supply, depth of the dive, and air consumption rates. Furthermore, the present dive computer determines dive conditions from these inputs and outputs and conveys this information to the diver with various display components.

More specifically, the present interactive dive computer provides for diver control of selected dive-related parameters and includes an input mechanism for setting at least one diver or dive-specific, dive-related parameter, a depth sensor for monitoring a depth below a surface of a body of water and an air sensor for monitoring an amount of air available in the compressed air supply. Also included in the present computer is a breathing rate monitor for monitoring air consumption over time and for determining a breathing rate for the diver, and an output device for receiving outputs from the input mechanism, the depth sensor, the air sensor, and the breathing rate monitor. The output device determines dive conditions based on the outputs which are reflective of the specific input settings selected by the diver.

In another embodiment, an interactive dive computer includes an input device enabling a diver to specify an air reserve to be available upon the completion of a dive, a water depth sensor to monitor how deep the diver dives, an air pressure sensor to monitor how much air is left in the compressed air supply, a processing unit to monitor air consumption over time, and therefore, the breathing rate of the diver, and a processing unit to accept information from all of the preceding elements. Upon receipt of the required input data, the processing unit determines a safe diving period as the length of time the diver may remain at the current depth and still safely ascend to the surface with the specified air reserve remaining in the compressed air supply. Typically, electrical switches provide the input mechanism for specifying the air reserve.

Thus, the present dive computer provides the flexibility to a diver to select his or her own safety margin. User control of the air reserve parameter is a feature that enables a diver to adjust the reserve according to his or her specific needs or circumstances of a particular dive. An advantage of the present interactive dive computer is that the diver need not be constrained by factory pre-set safety limits when they are too conservative or too liberal in light of the circumstances of an individual dive, and the displayed parameters such as the safe dive period are calculated to be specific to a particular diver.

Another feature of the present dive computer is a lock-out function for inhibiting changes to the specified parameter once a dive has commenced. This increases the reliability of the dive computer by ensuring that dive planning takes place on the surface. The lock-out continues to inhibit changes to the specified parameter after the diver has resurfaced and remains on the surface for a predetermined length of time.

Preferably, the dive computer stores the specified parameters such as air reserve value, diver age, gender, height/weight ratio, dive log history, or navigation headings. The specified values then may be used on future dives without any additional diver input. If there is no previous record of a diver-specified parameter, the computer can be configured to set the parameter to a manufacturer specified default value.

Information generated by the present dive computer can be communicated to the diver both visually and audibly. Preferably, the dive computer includes a display to confirm the specified parameter and to convey to the diver the time remaining in the safe diving period. Furthermore, an alarm

is included on the present computer to help ensure that the diver begins his or her ascent at the proper time. The alarm may be audible or visible, or both.

BRIEF DESCRIPTION OF THE DRAWINGS

FIG. **1** depicts a preferred embodiment of the present dive computer in block diagram form;

FIG. **2** depicts a preferred functional embodiment of the present dive computer in flow chart form; and

FIG. **3** depicts displays of the preferred embodiment of the present dive computer in the diver programming mode;

FIG. **4** depicts displays of the preferred embodiment of the present dive computer during initial stages of a dive;

FIG. **5** depicts displays of the preferred embodiment of the present dive computer during later stages of a dive; and

FIG. **6** depicts displays of the preferred embodiment of the present dive computer at the expiration of the safe diving period.

DESCRIPTION OF THE PREFERRED EMBODIMENT

Referring now to FIG. **1**, the present dive computer, generally designated **10**, includes two microprocessors, respectively designated **11** and **12**, for processing information generated by the various input devices, and for driving displays to communicate to the user the results of that processing. In the preferred embodiment, the microprocessors **11** and **12** are Sanyo model 5868H devices, however, equivalent microprocessors are contemplated. The microprocessor **12** drives a left display **14**, while the other microprocessor **11** drives a right display **16**. Both left and right displays **14**, **16** are preferably of the LCD type, however other suitable processor driven displays are contemplated. In the preferred embodiment **10**, the processing function is divided into two physical components, microprocessors **11** and **12**, although a single component is contemplated. Data passes between the microprocessors **11** and **12** via a serial data link **18**, forming, in essence, a single logical processing unit. Also, the preferred embodiment **10** apportions the display function between two components, left **14** and right **16**, although a single display is contemplated.

In the present dive computer **10**, right and left switches, respectively designated **20** and **22**, enable a diver to select a desired diver-specified, dive-related parameter. These parameters include, but are not limited to, the air reserve portion of a compressed air supply to be available at the completion of a dive, diver age, gender, height/weight ratio a dive log of previous dives, and/or navigational readings. If desired, additional switches **20**, **22** may be employed for the inputting of various parameters as needed. Alternatively, various actuation combinations of the right and left switches **20**, **22** may be employed to access various selected dive-related parameters.

In the preferred embodiment, the right switch **20** is connected to both microprocessors **11**, **12**, and activates the microprocessors when depressed, while the left switch **22** is connected only to the microprocessor **11** that drives the right side display **16**. The present dive computer **10** responds to diver actuation of the switches **20**, **22** to enter a specified parameter such as air reserve set point mode and to increase and decrease the value of the specified parameter.

The present dive computer **10** further includes a high tank pressure transducer **24** to monitor the compressed air supply, a low pressure transducer **26** to monitor depth, a battery check circuit **32** and a temperature circuit **34**. These sensor elements **24**, **26**, **32**, and **34** are connected to an analog-to-digital converter **28**. The converter **28** accepts the analog signals, translates them into digital signals, and outputs the signals to the right side microprocessor **11**. Alternately, a reciprocal path may be configured, with the converter **28** translating digital signals from the microprocessor **11** to analog signals for the sensors **24**, **26**, **32**, and **34**.

Accuracy of the present dive computer is maintained by a external communication and calibration circuit **48**. The calibration circuit is connected to the right side microprocessor **11**. Instructions and data for the microprocessors **11**, **12** are stored in a non volatile memory EEPROM **30**. The EEPROM is connected to the right side microprocessor **11**. Finally, the present dive computer **10** is powered by a power supply **36**, such as a conventionally available battery or combination of batteries. An audible alarm **39** is included as an addition to the display for alerting the diver of desired conditions.

Referring now to FIG. **2**, a flow chart of the present dive computer is depicted. Much of the following discussion relates to the flow chart because the microprocessors **11**, **12** are configured to implement the steps depicted in FIG. **2**. Selected dive-related parameters may be added, as desired, with a corresponding revision to the flow chart. However, the basic flow chart logic will be substantially similar for other input parameters. Once the desired steps are defined, the configuring of a commercially available microprocessor is a relatively routine matter.

The diver starts the process by manually activating the present dive computer **10**, designated at **40**. Next, a pre-dive check is performed as the present dive computer **10** enters a diagnostic mode **42**. The diagnostic mode **42** includes a countdown function which must be completed before beginning the dive, or the computer **10** will turn off.

After the diagnostic mode **42** is completed, the present computer **10** enters a surface mode **44**. It is contemplated that the computer **10** should be activated at the surface prior to diving. Surface activation calibrates the computer **10** to the surrounding ambient pressure. Turning the computer **10** on at depth will create a false "0" or surface point resulting in an inaccurate dive profile. The computer **10** will not activate at a depth greater than 10 feet. If diving has not begun within 30 minutes, the computer **10** will automatically turn off.

Next, the present dive computer **10** checks whether a default or a diver-specified parameter value should be used, shown at **46**. For example, the air reserve value will be discussed as a representative parameter. When the computer **10** is used for the first time (or any time after the power supply **36** is interrupted, i.e., battery replacement), a 300 PSI air reserve value is automatically established. The diver may accept the 300 PSI value or decide to program a new value as shown at **46**. If the diver decides to program a new air reserve value, the computer **10** checks at block **48** whether the computer is currently in log mode **49**. The computer **10** inhibits changes to the air reserve value until log mode **49** is completed. Log mode **49** recounts the history of previous dives for diver transcription into a permanent log. Next, at block **50**, the computer **10** checks whether the diver has already submerged. The computer **10** prevents changes to the air reserve value once a dive has commenced. Similarly, a minimum surface interval mode **80** prevents the computer **10** from entering the surface mode **44** until the computer has determined at block **52** that a resurfaced diver has remained

on the surface for ten minutes. The diver cannot modify the air reserve value after a dive has begun until the computer has returned to the surface mode **44**.

If the present dive computer **10** is not underwater, shown at **50**, in log mode **49**, or in minimum surface interval mode **80**, the computer **10** proceeds to access a range of available air reserve values at block **54** and display the range to the diver at block **56**. A range of 300 PSI to 950 PSI, with 50 PSI increments, is contemplated for the computer **10**. The diver then selects the desired value at **58**, and the computer **10** accepts the selected air reserve value at **60**.

Once the air reserve value is set, the present dive computer **10** enters a calculate dive profile mode **62**. The computer **10** calculates a safe diving period based on the air reserve value, current dive conditions and anticipated future needs. Both ascents and descents are calculated into the safe diving period. The computer **10** adjusts to changes in the dive profile as the changes occur, with the safe diving period increasing as the diver ascends to shallower depths and decreasing as the diver descends to deeper depths. The capacity to include multi-level diving in the calculation of the safe diving period is an advantage of the present dive computer **10** which is unavailable from conventional dive computers or table diving.

The calculate dive profile mode **62** also determines whether the diver requires decompression stops to reach the surface safely. Unlike dive tables, ascents are calculated by the computer **10** into the nitrogen uptake and elimination curves, resulting in additional bottom time and multiple level profiles. If the computer **10** determines that decompression stops are necessary, the air required for those stops is included in the computation of the safe diving period.

After each calculation, the computer **10** checks whether the diver has returned to the surface, shown at **78**. If the diver has returned to the surface, the computer **10** checks whether the diver has been on the surface for ten minutes at **52**. The computer **10** remains in the minimum surface interval mode **80** until the surface interval has reached ten minutes of elapsed time. After the ten minutes have elapsed, the computer returns to the surface mode **44**.

If the computer **10** determines at block **78** that the diver remains submerged, the computer **10** checks whether the safe diving period has expired **64**. If the period has not expired, the computer **10** checks whether the safe diving period equals 5 minutes, shown at **74**. If the safe diving period does not equal 5 minutes, the computer **10** returns to the calculate dive profile mode **62**. If the safe diving period equals 5 minutes, the computer **10** resets a flag **76** before returning to the calculate dive profile mode **62**.

When the present dive computer **10** determines that the safe diving period has expired, it checks whether the flag has been reset **72**. If the flag is in a reset state, the computer **10** activates an audible alarm **66**, displays a visual alarm **68**, and sets the flag **70**. A set flag prevents needlessly repetitive alarms. The computer **10** then returns to the calculate dive profile mode **62**.

Referring now to FIGS. **3–6**, an integrated display **100** of a preferred embodiment of the present dive computer **10** is depicted. The integrated display **100** includes both the left side display **14** and the right side display **16**. The left side display component **14** includes a diver-specified parameter input field **102**, which as depicted displays input for surface PSI (air reserve), a safe diving period field **104**, a compressed air supply pressure field **106**, an ambient temperature field **108**, and a display alarm field **120**. The compressed air supply pressure field **106** depicts air supply pressure both graphically and numerically. Each segment of the graphic pressure bar **103** represents 200 PSI.

The right side display component **16** includes a depth field **112**, a no decompression time remaining field **110**, a dive sequence field **114** and an elapsed time field **118**. The no decompression time remaining field **110** depicts time remaining before decompression stops are necessary both graphically and numerically. Each segment of the graphic bar **111** represents 2 minutes.

In operation, a diver activates the present dive computer **10** by depressing the right switch **20**. Referring now to FIG. **3**, The integrated display **100** of the present dive computer **10** is depicted during a pre-dive planning sequence. The safe diving period field **104** shows 90 minutes of time remaining, and the compressed air supply field **106** shows 3000 PSI of air pressure. The diver may now specify the selected dive parameter, e.g. air reserve value, by depressing the left side switch **22** for three seconds. The left side display **14** shows an air reserve value of 500 PSI in the surface PSI field **102**. The diver may increase the value by 50 PSI by depressing the right switch **20**. Depressing the left switch **22** decreases the value by 50 PSI. Depending on the parameter selected, other incremental parameter-specific values may be substituted for PSI, including, but not limited to, diver's age in years, and height/weight ratio. When the desired air reserve value has been selected, the diver releases the switches **20**, **22**, and the surface PSI field **102** goes blank within one minute.

During the dive, the safe diving period is calculated and updated once per second. The safe diving period field **104** displays the safe diving period in minutes. The safe diving period displayed is based upon default rate of 33 PSI/min consumption. Following one minute of breathing at depth, the default rate is replaced by the diver's personal rate. The present dive computer **10** resorts to the default value whenever the personal rate is unavailable (typically after the battery **36** is replaced). Repetitive or second tank dives use the stored value from the previous dive.

Referring now to FIG. **4**, the integrated display **100** of the present dive computer **10** is depicted during the early stages of a dive. The surface PSI field **102** is blank because modifications to the air reserve value are not permitted during a dive. The depth field **112** shows the diver is currently at 44 feet below the surface, and the elapsed time field **118** shows the dive began 11 minutes ago. Also, air supply pressure has dropped to 2100 PSI, as depicted in the compressed air supply field **106**, and safe diving period has fallen to 23 minutes, as depicted in the safe diving period field **104**. Note that the safe diving period dropped 67 minutes during the first 11 minutes of the dive. This is due in large part to the computer **10** compensating for the air required to reach the surface from 44 feet of depth.

Referring now to FIG. **5**, the integrated display **100** of the present dive computer **10** is depicted during the later stages of a dive. The depth field **112** shows the diver is currently 103 feet below the surface, and the elapsed time field **114** shows the dive is 19 minutes long. By now, air supply pressure has dropped to 1400 PSI, as depicted in the compressed air supply field **106**, and safe diving period has fallen to 9 minutes, as depicted in the safe diving period field **104**. Note that the safe diving period dropped 14 minutes during 8 minutes of dive time. This is due in large part to the computer **10** compensating for the extra air required to reach the surface as the diver continues to descend. Also, the ambient temperature field **108** indicates a drop in water temperature as depth increases.

Referring now to FIG. **6**, the integrated display **100** of the present dive computer **10** is depicted at the expiration of the safe diving period. The safe diving period field **104** shows that no time remains in the safe diving period, and the display alarm field **120** flashes an up arrow. Note that the compressed air supply field **106** shows a remaining air supply pressure of 600 PSI, 100 PSI in excess of the programmed air reserve value. If the diver ascends immediately to the surface, he or she will arrive with the programmed 500 PSI air reserve available.

When the diver enters the decompression mode, safe ascent directly to the surface is no longer permissible. The diver is obligated to remain below an indicated "ceiling" to off-gas nitrogen. This is done during a decompression (DECO) stop or a series of DECO stops depending upon the amount of nitrogen saturation in the body. The present dive computer **10** provides the diver with the depth at which to stop, the amount of time to stop, and total ascent time to reach the surface. Total ascent time represents travel to the surface at the prescribed rate of ascent plus the time spent at all DECO stops. The computer includes all of these factors in the dive profile calculation mode **62**, and the safe diving period reflects the air require for safe decompression ascents.

After the diver surfaces, the present dive computer **10** enters the minimum surface interval mode **80**. During the minimum surface interval mode **80**, the integrated display **100** alternates between the previous dive's maximum depth and bottom time (shown on the depth field **112** and the no decompression time remaining field **110**, respectively) and "surface=0 ft." for five seconds each. The safe diving period field **104** and the compressed air supply pressure field **106** continue to display the remaining safe diving period and air supply pressure, respectively. If another dive is made during this 10-minute interval, the computer **10** calculates it as a continuation of the previous dive. The air reserve value cannot be modified during this surface interval. If the diver switches compressed air supplies during the minimum surface interval, the new air supply pressure is displayed in the air supply pressure field **106**. The previous air consumption rate, stored in the memory, will be used to calculate the air time until a new breathing rate is established at depth.

While a particular embodiment of the interactive dive computer of the invention has been shown and described, it will be appreciated by those skilled in the art that changes and modifications may be made thereto without departing from the invention in its broader aspects and as set forth in the following claims.

What is claimed is:

1. An interactive apparatus for use by a scuba diver to provide for diver control of selected dive-related parameters, comprising:

input means for setting at least one diver or dive-specific, dive-related parameter;

depth sensor means for monitoring a depth below a surface of a body of water;

air sensor means for monitoring an amount of air available in the compressed air supply;

computer means for receiving outputs from said input means, said depth sensor means, said air sensor means, and for monitoring air consumption over time based upon said output from said air sensor means, determining a breathing rate for the diver based on said air consumption over time, and for determining selected dive conditions based on said outputs, and which are reflective of the specific input settings selected by the diver; and

display means for displaying said selected dive conditions determined by said computer means, wherein

activation of said computer means is prevented when said depth sensor means monitors a predetermined depth below said surface.

2. The apparatus of claim **1**, wherein said input means is configured to receive diver input signals for selecting a specified reserve portion of compressed air to be available upon completion of a dive.

3. The apparatus of claim **1**, wherein said computer means performs a lock-out for inhibiting changes to at least one of the specified input parameters once a dive has commenced.

4. The apparatus of claim **3**, wherein said lock-out performed by said computer means continues to inhibit changes to said at least one specified input parameter after the diver has resurfaced until the expiration of a predetermined length of time.

5. The apparatus of claim **1**, wherein said computer means sets each of said input parameters to a value specified in an immediately preceding dive, subject to diver modification.

6. The apparatus of claim **1**, wherein said computer means sets each of said parameters to a predetermined default value, subject to diver modification.

7. The apparatus of claim **1**, wherein said computer means further determines a safe diving period reflective of said input parameters, determines a rate of safe ascent for the diver from the current depth to the surface, and determines an amount of air required to make the safe ascent, and wherein said display means displays said amount of air required for safe ascent determined by said computer means.

8. The apparatus of claim **7**, wherein said computer means is configured to periodically redetermine the safe diving period in order to reflect any intervening changes in at least one of the diver's breathing rate, depth, and air required for safe ascent.

9. The apparatus of claim **7**, further including alarm means connected to said computer means for alerting the diver of the expiration of the safe diving period.

10. An interactive apparatus for use by a scuba diver to provide for diver control of a reserve portion of a compressed air supply, comprising:

input means for setting said reserve portion of the compressed air supply to be available upon the completion of a dive;

depth sensor means for monitoring a depth below a surface of a body of water;

air sensor means for monitoring an amount of air available in the compressed air supply;

computer means for receiving outputs from said input means, and said depth sensor means, said air sensor means, and said breathing rate means and for monitoring air consumption over time based upon said output from said air sensor means and determining a breathing rate for the diver based upon said air consumption over time;

wherein said computer means determines a safe diving period as the length of time the diver may remain at the current depth and still safely ascend to the surface with said specified reserve portion remaining in the compressed air supply, and wherein

said computer means performs a lock-out for inhibiting changes to said reserve portion once a dive has commenced.

11. The apparatus of claim **10**, wherein said depth sensor means includes a transducer for measuring ambient hydrostatic pressure.

12. The apparatus of claim 10, wherein said air sensor means includes a transducer for measuring air pressure.

13. The apparatus of claim 10, wherein said computer means provides an initial predetermined breathing rate until said computer means can establish the diver's actual breathing rate.

14. The apparatus of claim 10, wherein said computer means initially sets the breathing rate to a breathing rate set in an immediately preceding dive until said breathing rate means can establish the diver's actual breathing rate for the current dive.

15. The apparatus of claim 10, further comprising a display means connected to said computer means for visually communicating to the diver the safe diving period.

16. The apparatus of claim 10, wherein said computer means alerts the diver of the expiration of the safe diving period through an alarm indication.

17. The apparatus of claim 16, wherein said alarm indication includes display means for providing a visual indication of the expiration of the safe diving period.

18. The apparatus of claim 16, wherein said alarm indication includes a sound means for providing an audible indication of the expiration of the safe diving period.

19. An interactive apparatus for use by a scuba diver to provide for diver control of a reserve portion of a compressed air supply, comprising:

input means for setting said reserve portion of the compressed air supply to be available the completion of a dive;

depth sensor means for monitoring a depth below a surface of a body of water;

air sensor means for monitoring an amount of air available in the compressed air supply;

alarm means for alerting the diver of the expiration of a safe diving period; and

computer means for receiving outputs from said input means, said depth sensor means, said air sensor means, and for monitoring air consumption over time based upon said output from said air sensor means, determining a breathing rate for the diver based upon said air consumption over time, determining a rate of safe ascent for the diver from the current depth to the surface and determining the air required to make the safe ascent, and for providing an output to said alarm means;

wherein said computer means repetitively determines a safe diving period as the length of time the diver may remain at the current depth and still safely ascend to the surface with said specified reserve portion remaining in the compressed air supply, activating said alarm means when the safe diving period expires; and

wherein once said alarm means is activated, and where a redetermination of the safe dive period increases due to intervening changes in the diver's breathing rate, depth, or projected ascent time, said alarm means is reset and armed to reactivate when the redetermined safe dive period again expires.

20. The apparatus of claim 19, further comprising a display means connected to said computer means for visually communicating the safe diving period to the diver.

21. An interactive apparatus for use by a scuba diver to provide for diver control of selected dive-related parameters, comprising:

input means for setting at least one diver or dive-specific, dive-related parameter;

depth sensor means for monitoring a depth below a surface of a body of water;

air sensor means for monitoring an amount of air available in the compressed air supply;

computer means for receiving outputs from said input means, said depth sensor means, said air sensor means, and for monitoring air consumption over time based upon said output from said air sensor means, determining a breathing rate for the diver based on said air consumption over time, and for determining selected dive conditions based on said outputs, and which are reflective of the specific input settings selected by the diver;

wherein said computer means performs a lock-out for inhibiting changes to at least one of the specified input parameters once a dive has commenced.

22. The apparatus of claim 21, wherein said lock-out performed by said computer means continues to inhibit changes to said at least one specified input parameter after the diver has resurfaced until the expiration of a predetermined length of time.

* * * * *